M-10123 1

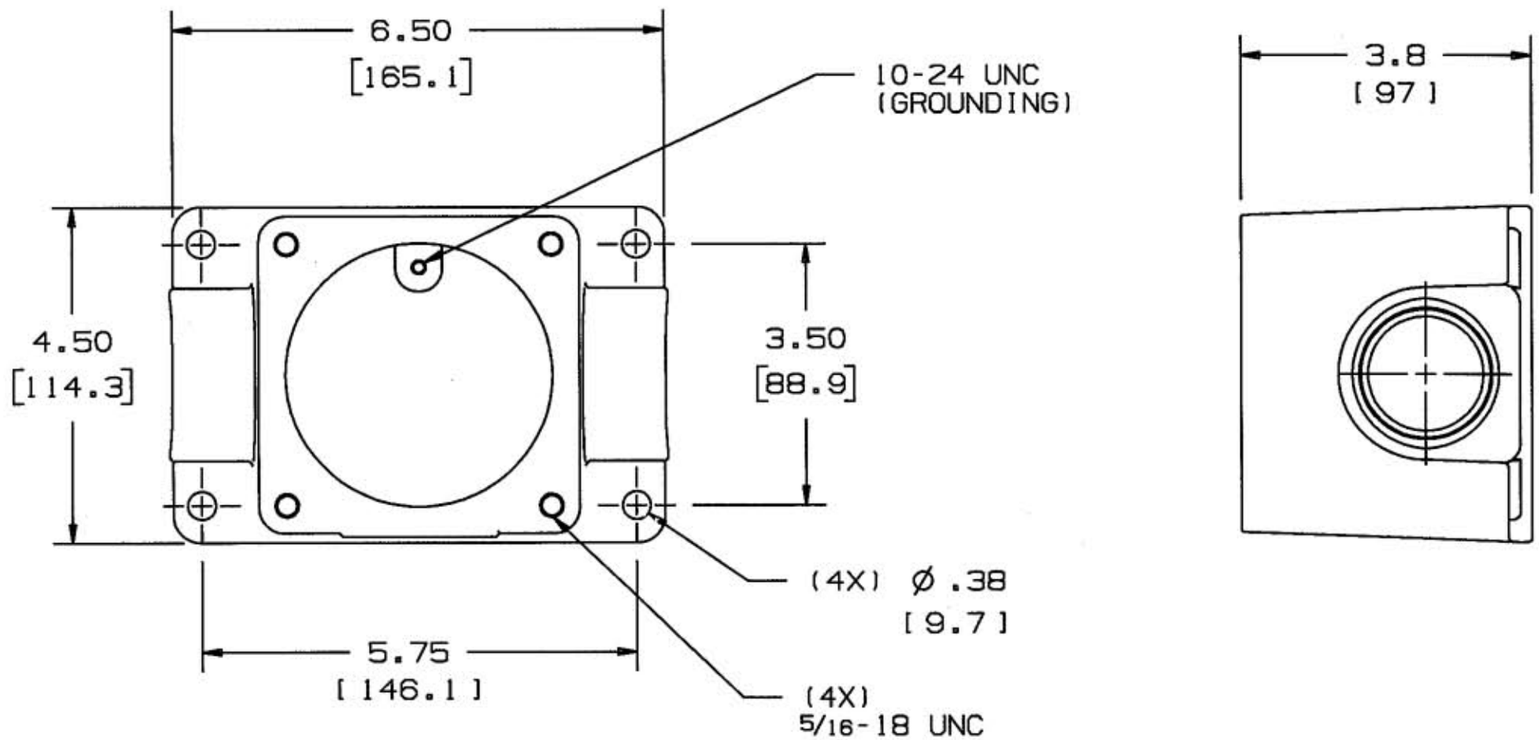

NOTE:
1. DIMENSIONS ARE IN INCHES [MM].
2. .X TOLERANCE TO BE ±.06
   .XX TOLERANCE TO BE ±.03

CATALOG NUMBER	HUB SIZE
MB604W	1 NPT
MB605W	$1\frac{1}{4}$ NPT
MB606W	$1\frac{1}{2}$ NPT

LIST OF PARTS

DESCRIPTION	MATERIAL	FINISH
BOX	ALUMINUM	GRAY

SYM	REVISIONS	APP	DATE
1	RELEASED PER DCN 13080. ABS		5/17/06

THE DESIGN AND DIMENSIONS OF THE PRODUCT SHOWN ON THIS DRAWING ARE SUBJECT TO CHANGE WITHOUT NOTICE

TITLE
60 AMP BACK BOX
FEED THROUGH

TOLERANCES UNLESS OTHERWISE SPECIFIED
FRACTIONS ±1/64
~~DECIMALS ±.005~~
ANGLES ±2°

WIRING DEVICE-KELLEMS
HUBBELL INCORPORATED
BRIDGEPORT, CT

DR. BY ABS | APP. BY
TR. BY | SCALE 1:2
CHK'D BY | DATE 5/17/06

DIMENSION SHEET FOR CAT. NO. SEE TABLE

REPAIRABLE ☐ NON-REPAIRABLE ☒

B

M-10123

1

CODE 74545