M-4459 | 1

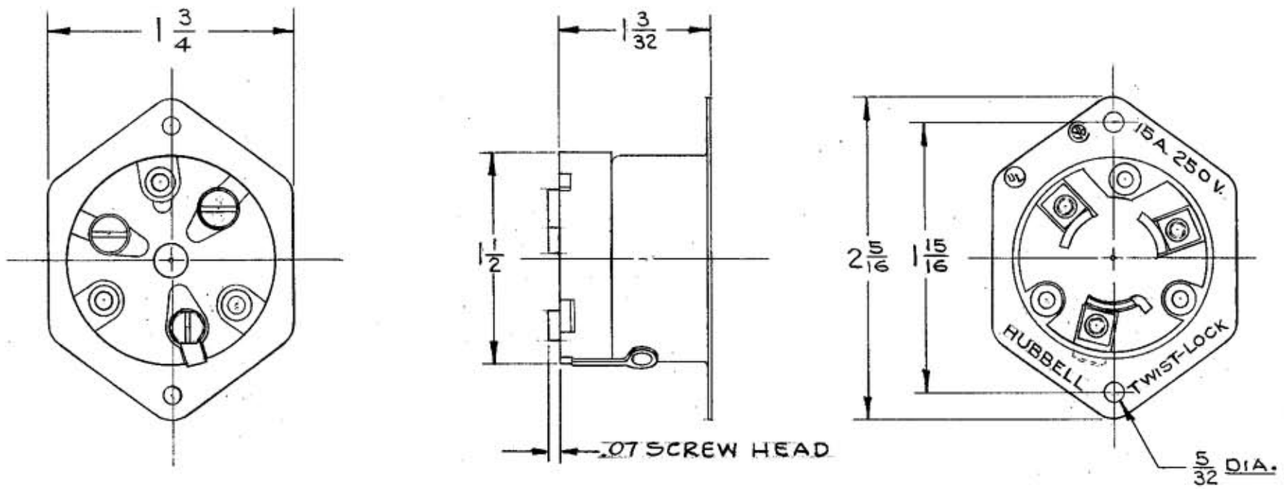

LIST OF PARTS

DESCRIPTION	MATERIAL	FINISH
BASE	BAKELITE	BROWN
CASING	.025 BRASS	POL. NICKEL
CONTACT BLADES	.060 BRASS	
GROUND SHUNT	.020 BRASS	
BINDING SCREW	BRASS	
HEX. HD. BIND'G SCR.	BRASS	GREEN
WASHERS	.070 BRASS	

SYM	REVISIONS	APP	DATE
1	ADDED WASHERS TO LIST OF PARTS AND .07 SCREW HEAD PROTRUSION ADJ.		5-31-90

DIMENSION SHEET FOR CAT. NO. 4586

REPAIRABLE ☐ NON-REPAIRABLE ☒

B M-4459 1

TITLE
15 A. 250 V. 3 WIRE GROUNDING
TWIST-LOCK BAKELITE
FLANGED INLET

TOLERANCES UNLESS OTHERWISE SPECIFIED
FRACTIONS ± 1/64
DECIMALS ± .005
ANGLES ± 2°

HARVEY HUBBELL, INC.
BRIDGEPORT, CONN.

DR. BY ASM	APP. BY
TR. BY	SCALE FULL
CHK'D. BY	DATE 5-9-66

CODE 74545