M-5306 | 7

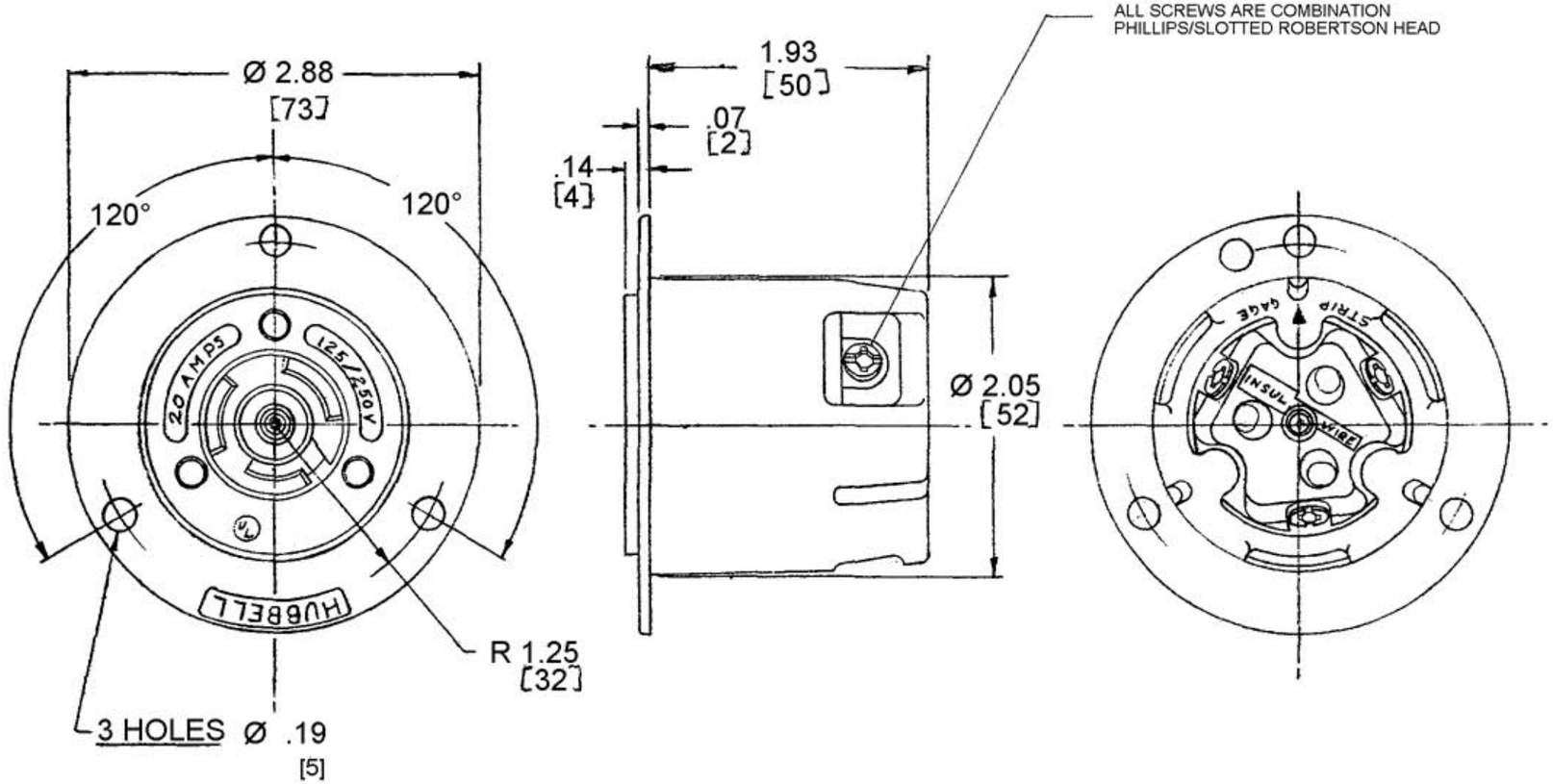

LIST OF PARTS

DESCRIPTION	MATERIAL	FINISH
RETAINING SHELL	POLYCARBONATE	CLEAR
BODY	NYLON	NATURAL
CASING	NYLON	NATURAL
WIRE CLAMP	.080 C.R.S	NICKEL PLATE
BINDING PLATE	.060 BRASS	1- WHITE
TERMINAL SCREWS	BRASS	1- WHITE
		2- BRASS
CONTACT SPRING	.031 BRONZE	

SYM	REVISIONS	APP	DATE
7	RETAINER MAT. POLY. WAS LEXAN, ADDED HBL SUFFIX TO CAT NO. PER DCN 8996 MYA	CJC	10/10/01
6	REVISED SCREW HEADS TO TRI-DRIVE PER DCN 7633 RCM	DVB	6/23/00
5	NUMEROUS CHANGES, SEE RECORD PRINT PER DCN #4114. DJG	JZ	6-8-96
4	CHANGED DIM. 2" TO 1 15/16 & 5/64 TO 3/64 WIRE CLAMP FINISH WAS ZINC PL.	CJC	AJL 1-20-92
3	CHANGED DIM. 2 9/16 TO 2 3/64 AJL	CB	11-28-90
2	CASING MAT'L. WAS LEXAN AJL		4-2-76
1	RETAINING SHELL WAS BLACK CASING WAS NATURAL		7-5-72

THE DESIGN AND DIMENSIONS OF THE PRODUCT SHOWN ON THIS DRAWING ARE SUBJECT TO CHANGE WITHOUT NOTICE

TITLE 20A 125/250V 3P-3W TWISTLOCK FLANGED OUTLET NON-NEMA

TOLERANCES UNLESS OTHERWISE SPECIFIED
FRACTIONS ± 1/64
DECIMALS ± .005
ANGLES ± 2°

WIRING DEVICE-KELLEMS
HUBBELL INCORPORATED
BRIDGEPORT, CT

DR. BY KHF	APP. BY
TR. BY	SCALE FULL
CHK'D BY	DATE 7/28/71

DIMENSION SHEET FOR CAT. NO. HBL3326-C

REPAIRABLE ☐ NON-REPAIRABLE ☒

B

M-5306

7

CODE 74545